South Nation Conservation
de la Nation Sud
1947-2017

38 rue Victoria Street, Finch, ON K0C 1K0 Tel: 613-984-2948 Fax: 613-984-2872 Toll Free: 1-877-984-2948 www.nation.on.ca

Application for a Permit to Construct or Demolish
Applicant's Checklist

- ☐ Completed Application
- ☐ Deed of Land
- ☐ Floor Plan (including basement area)
  for each Permit Application Submitted
- ☐ SNC Planning and Engineering Review (if applicable)
  (Refer to Schedule #3 section 5) of the septic permit

Applicable fees will be collected at the time the permit(s) is picked up at the Finch office.

Above documents and information not completed or not submitted may delay the approval process.

SOUTH NATION CONSERVATION
DE LA NATION SUD
1947-2017

Application for a Permit to Construct or Demolish

This form is authorized under subsection 8(1.1) of the Building Code Act.

For use by Principal Authority

Permit number:_____ Date received:_____

Roll number:_____

Application submitted to: _____SOUTH NATION CONSERVATION_____

A. Project information

Building number, street name		Unit number	Lot/con.
Municipality	Postal code	Plan number/other description	
Project value est. $		Area of work (m^2)	

B. Purpose of application

❑ New construction ❑ Addition to an existing building ❑ Alteration/repair ❑ Demolition ❑ Conditional Permit

Proposed use of building	Current use of building
Description of proposed work	

C. Applicant

Applicant is: ❑ Owner or ❑ Authorized agent of owner

Last name	First name	Corporation or partnership	
Street address		Unit number	Lot/con.
Municipality	Postal code	Province	E-mail
Telephone number ( )	Fax ( )	Cell number ( )	

D. Owner (if different from applicant)

Last name	First name	Corporation or partnership	
Street address		Unit number	Lot/con.
Municipality	Postal code	Province	E-mail
Telephone number ( )	Fax ( )	Cell number ( )	

SOUTH NATION CONSERVATION
DE LA NATION SUD
1947-2017

E. Builder (optional)			
Last name	First name	Corporation or partnership (if applicable)	
Street address		Unit number	Lot/con.
Municipality	Postal code	Province	E-mail
Telephone number ( )	Fax ( )	Cell number ( )	

F. Tarion Warranty Corporation (Ontario New Home Warranty Program)		
i. Is proposed construction for a new home as defined in the *Ontario New Home Warranties Plan Act*? If no, go to section G.	❑ Yes	❑ No
ii. Is registration required under the *Ontario New Home Warranties Plan Act*?	❑ Yes	❑ No
iii. If yes to (ii) provide registration number(s): _____		

G. Required Schedules

i) Attach Schedule 1 for each individual who reviews and takes responsibility for design activities.

ii) Attach Schedule 2 where application is to construct on-site, install or repair a sewage system.

H. Completeness and compliance with applicable law		
i) This application meets all the requirements of clauses 1.3.1.3 (5) (a) to (d) of Division C of the Building Code (the application is made in the correct form and by the owner or authorized agent, all applicable fields have been completed on the application and required schedules, and all required schedules are submitted). Payment has been made of all fees that are required, under the applicable by-law, resolution or regulation made under clause 7(1)(c) of the *Building Code Act, I992*, to be paid when the application is made.	❑ Yes ❑ Yes	❑ No ❑ No
ii) This application is accompanied by the plans and specifications prescribed by the applicable by-law, resolution or regulation made under clause 7(1)(b) of the *Building Code Act, 1992.*	❑ Yes	❑ No
iii) This application is accompanied by the information and documents prescribed by the applicable by-law, resolution or regulation made under clause 7(1)(b) of the *Building Code Act, 1992* which enable the chief building official to determine whether the proposed building, construction or demolition will contravene any applicable law.	❑ Yes	❑ No
iv) The proposed building, construction or demolition will not contravene any applicable law.	❑ Yes	❑ No

I. Declaration of applicant

I _____declare that:
(print name)

1. The information contained in this application, attached schedules, attached plans and specifications, and other attached documentation is true to the best of my knowledge.
2. If the owner is a corporation or partnership, I have the authority to bind the corporation or partnership.

_____ _____
Date Signature of applicant

SOUTH NATION CONSERVATION
DE LA NATION SUD
1947-2017

SCHEDULE 1: DESIGNER INFORMATION

Use one form for each individual who reviews and takes responsibility for design activities with respect to the project.

A. Project Information

Building number, street name			Unit no.	Lot/con.
Municipality	Postal code	Plan number/ other description		

B. Individual who reviews and takes responsibility for design activities

Name		Firm		
Street address			Unit no.	Lot/con.
Municipality	Postal code	Province	E-mail	
Telephone number ( )	Fax number ( )		Cell number ( )	

C. Design activities undertaken by individual identified in Section B. [Building Code Table 3.5.2.1. of Division C]

❑ House	❑ HVAC – House	❑ Building Structural
❑ Small Buildings	❑ Building Services	❑ Plumbing – House
❑ Large Buildings	❑ Detection, Lighting and Power	❑ Plumbing – All Buildings
❑ Complex Buildings	❑ Fire Protection	❑ On-site Sewage Systems

Description of designer's work

D. Declaration of Designer

I _____ declare that (choose one as appropriate):
(print name)

❑ I review and take responsibility for the design work on behalf of a firm registered under subsection 3.2.4.of Division C, of the Building Code. I am qualified, and the firm is registered, in the appropriate classes/categories.
Individual BCIN: _____
Firm BCIN: _____

❑ I review and take responsibility for the design and am qualified in the appropriate category as an "other designer" under subsection 3.2.5.of Division C, of the Building Code.
Individual BCIN: _____
Basis for exemption from registration: _____

❑ The design work is exempt from the registration and qualification requirements of the Building Code.
Basis for exemption from registration and qualification: _____

I certify that:

1. The information contained in this schedule is true to the best of my knowledge.
2. I have submitted this application with the knowledge and consent of the firm.

_____ _____
Date Signature of Designer

South Nation Conservation
de la Nation Sud
1947-2017

SCHEDULE 2: SEWAGE SYSTEM INSTALLER INFORMATION

A. Project Information			
Building number, street name		Unit number	Lot/con.
Municipality	Postal code	Plan number/ other description	

B. Sewage system installer

Is the installer of the sewage system engaged in the business of constructing on-site, installing, repairing, servicing, cleaning or emptying sewage systems, in accordance with Building Code Article 3.3.1.1, Division C?

❑ Yes (Continue to Section C) ❑ No (Continue to Section E) ❑ Installer unknown at time of application (Continue to Section E)

C. Registered installer information (where answer to B is "Yes")			
Name			BCIN
Street address			Unit number / Lot/con.
Municipality	Postal code	Province	E-mail
Telephone number ( )	Fax ( )		Cell number ( )

D. Qualified supervisor information (where answer to section B is "Yes")	
Name of qualified supervisor(s)	Building Code Identification Number (BCIN)

E. Declaration of Applicant:

I _____ declare that:
(print name)

❑ I am the applicant for the permit to construct the sewage system. If the installer is unknown at time of application, I shall submit a new Schedule 2 prior to construction when the installer is known;

OR

❑ I am the holder of the permit to construct the sewage system, and am submitting a new Schedule 2, now that the installer is known.

I certify that:

1. The information contained in this schedule is true to the best of my knowledge.
2. If the owner is a corporation or partnership, I have the authority to bind the corporation or partnership.

_____ _____

Date Signature of applicant

Personal information contained in this form and schedules is collected under the authority of subsection 8(1.1) of the *Building Code Act, 1992*, and will be used in the administration and enforcement of the *Building Code Act, 1992*. Questions about the collection of personal information may be addressed to: a) the Chief Building Official of the municipality or upper-tier municipality to which this application is being made, or, b) the inspector having the powers and duties of a chief building official in relation to sewage systems or plumbing for an upper-tier municipality, board of health or conservation authority to whom this application is made, or, c) Director, Building and Development Branch, Ministry of Municipal Affairs and Housing 777 Bay St., 2nd Floor, Toronto, M5G 2E5 (416) 585-6666.

SOUTH NATION CONSERVATION
DE LA NATION SUD
1947-2017

SCHEDULE 3 – APPLICATI8ON INFORMATION

1. Application form, Schedules 1 to 11 must be submitted in triplicate copies.
2. Application fees:
   a) Class 2 & 3 systems and tank replacement: $365
   b) Class 4 & 5 systems: < 4000 L/d: systems requiring annual maintenance: $795; Other Systems: $720
   c) Class 4 & 5 systems: ≥ 4000 L/d and < 10000 L/d: systems requiring annual maintenance: $1,155; Other Systems: $1,050
   d) For Certificate of Change (revisions), transfer of permit and additional inspections please refer to fee schedule
3. Class 4 fees will not include the excavation inspection, this inspection will be considered as an additional to allow the homeowner the option of obtaining a certified engineer or SNC to conduct the excavation inspection. The certified engineer must provide SNC with an inspection report that will be part of the permit process and approval. Please refer to fee schedule for additional Inspections.
4. No application will be processed if a copy of the Transfer/Deed of Land or a municipal tax receipt and architectural drawing for the property in question are not enclosed.
5. Any changes subsequent to the original application will require that a Certificate of Change and fees be submitted to our office - Section 8.(12)(13)(14) of the Building Code Act. Please refer to fee schedule.
6. Contact the applicable CA Planning and Engineering department or Township Office if the said property is located in proximity of a waterway, in a zone subject to landslides or unstable slopes. A development permit may be required from the authority - Section 8.(2)(a) of the Building Code Act.
7. SNC strongly recommends that fencing or equivalent protection encircle any test pit or any septic/holding tank excavation until placement of backfill material, and that tank access lids always be maintained in place. SNC and its agent will not assume any responsibility for negligence relating to these safety measures.
8. The operator/owner of the sewage system shall keep it maintained at all times so that its construction remains in accordance with the requirements of the Ontario Building Code. Vehicular traffic (including snowmobiles and ATVs) must not be allowed over the leaching bed. Do not allow roof drains to discharge to the treatment unit or surface waters to drain towards the area of the leaching bed - Section 8.9.3.2.(1)(2) of the Ontario Building Code.
9. The sewage system permit will be cancelled after twelve (12) months of the date of issuance of the said permit - Section 8.(10) (b) (c) of the Building Code Act.
10. Tile drainage within 8 meters of the leaching bed must be removed or the lines broken so as to prevent the entry of sewage effluent into the drains. Table 8.2.1.6. B and Section 8.2.1.6.(2) of the Ontario Building Code.
11. We recommend that the following trees be kept at a distance of 5 meters for hard maple, elm, ash and evergreen and a distance of 8 meters for silver maple, soft maple, willow family, poplar or any large trees. We may require a letter from the applicant accepting responsibility for any damages caused to or by any trees - Section 8.9.3.2.(2) of the Ontario Building Code.
12. The building shall be located and the building site graded so that water will not accumulate at or near the building and will not adversely affect any adjacent properties - Section 3.1.17.1.(1) of the Ontario Building Code.
13. Where piping may be exposed to freezing conditions, it shall be protected from frost (see Appendix A), Section 7.3.5.5.(1) of the Ontario Building Code.

_____ _____
Signature of Owner Date

_____ _____
Signature of agent (if applicable) Date

SOUTH NATION CONSERVATION
DE LA NATION SUD
1947-2017

SCHEDULE 4 – SOIL AND WATER TABLE INFORMATION

(Minimum depth of test pit: 2 metres)

Name of applicant/agent: _____ Date: _____ Time: _____ Applicant/agent's signature: _____	Inspector: _____ Date: _____ Time: _____ Inspector's signature: _____

EG (……..) Soil description T .5 m 1.0 m 1.5m 2.0 m	EG (……..) Soil description T .5 m 1.0 m 1.5m 2.0 m
EG (……..) Soil description T .5m 1.0 m 1.5m 2.0 m	EG (……..) Soil description T .5m 1.0 m 1.5m 2.0 m

LEGEND

BR = Bedrock
GWT = Ground water table
HGWT = High ground water table
M = Metres
EG = Existing grade
T = Percolation rate

SOUTH NATION CONSERVATION
DE LA NATION SUD
1947-2017

SCHEDULE 5- PERMIT APPLICATION / CERTIFICATE OF CHANGE

☐ PERMIT APPLICATION ☐ CERTIFICATE OF CHANGE

1. **TYPE OF WORK PROPOSED:**

☐ New installation ☐ Replacement ☐ Alteration

2. **TYPE OF WATER SUPPLY (Identify all types). (Check applicable: P = Proposed or E = Existing)**

Drilled well: P☐ E☐ Sandpoint well: P☐ E☐ Dug/bored: P☐ E☐

Municipal: P☐ E☐ River intake: P☐ E☐ ☐ Other:_____

3a) **DAILY SEWAGE DESIGN FLOW**

☐ Bedrooms _____ ☐ House (floor area) _____ m^2

☐ Persons _____ ☐ Total fixture units _____ (Schedule 7)

☐ Residential flow _____ L/day ☐ Lot surface area _____m^2

3b) **DAILY DESIGN FLOW FOR OTHER OCCUPANCIES**

_____ L/day

☐ Detailed effluent flow calculations: _____

_____

_____

4. **TYPE OF TREATMENT UNIT (TANK)** ☐ Proposed ☐ Existing

☐ Volume:_____L ☐ Manufacturer_____

☐ Tertiary: model _____

☐ Effluent Filter/Risers

☐ Make_____ ☐ Model:_____

5. **TYPE OF SYSTEM**

☐ **Class 2 - LEACHING PIT** ☐ **Class 3 - CESSPOOL**

☐ **Class 4**

☐ Conventional/Chambers ☐ Filter Media ☐ Area Bed

☐ Shallow Buried ☐ Filter Systems

☐ **Class 5 – HOLDING TANK**

SOUTH NATION CONSERVATION
DE LA NATION SUD
1947-2017

DISPOSAL FIELD

☐ **CONVENTIONAL PIPE** ☐ Chambers Make: _____ Model: _____

☐ 75 mm Total length: _____ metres

☐ 100 mm # of runs____ of _____metres

☐ **FILTER BED**

Stone_____ m^2 Sand _____ m^2

Pipe _____m Quantity of filter media _____ m^3

☐ **AREA BED**

Stone _____ m^2 Sand _____ m^2

Pipe _____m Spacing _____m

☐ **FILTER SYSTEMS**

Stone _____ m^2 Sand _____ m^2 \

Make _____ Model_____

☐ **SHALLOW BURIED**

Pipe _____ m Spacing _____m

☐ **PUMP**

Volume calculations _____

Specify discharge rate required: _____L/15 mins

Make_____ ☐ Model _____

☐ **DISTRIBUTION BOX/FLOW DIVIDER**

Describe: _____

☐ **FROST PROTECTION REQUIRED**

☐ YES If YES, describe: _____

_____

☐ NO

LOADING RATE CALCULATIONS

Loading rate: _____L/m^2/d (Sections 8.7.4.1 and 8.7.5.2 of the Ontario Building Code)

Loading rate/contact area calculations: _____L/d ÷ _____L/ m^2/d = _____m^2

Percolation time of native soil: _____

Percolation time of imported leaching bed fill: _____

Dimension of excavation: _____ m **x** _____m = _____ m^2

SOUTH NATION CONSERVATION
DE LA NATION SUD
1947-2017

SCHEDULE 6

AS-BUILT – LAYOUT SECTION (PLAN VIEW)

SEPARATION DISTANCES (METRES)

D1 _____	D4 _____	D7 _____	D10 _____	D13 _____
D2 _____	D5 _____	D8 _____	D11 _____	D14 _____
D3 _____	D6 _____	D9 _____	D12 _____	D15 _____

ELEVATIONS (METRES)

BM _____	X2 _____	X4 _____	X6 _____	X8 _____
X1 _____	X3 _____	X5 _____	X7 _____	

BOTTOM OF PIPES (METRES)

X9 _____	X10 _____	X11 _____	X12 _____

I hereby certify that the sewage system as described in this report was installed in accordance with the requirements of the Building Code Act 1992, the Ontario Building Code 1997, local municipal bylaws, and the requirements outlined in this Sewage System Permit.

_____ _____ _____

SIGNATURE OF INSTALLER | BCIN NUMBER | DATE

SOUTH NATION CONSERVATION
DE LA NATION SUD
1947-2017

SCHEDULE 7

FIXTURE UNIT COUNT

(Ontario Building Code Table 7.4.9.3 and Table 7.4.10.2)

	Fixtures	# Existing	+	# Proposed	X	Unit Count	=	Fixture Count
BATHROOM	Bathroom group (toilet, sink and tub or shower) with flush tank		+		X	6	=	
	Bathtub with/without overhead shower		+		X	1.5	=	
	Shower stall		+		X	1.5	=	
	Wash basin (1 1/2 inch trap)		+		X	1.5	=	
	Watercloset (toilet) tank operated		+		X	4	=	
	Bidet		+		X	1	=	
KITCHEN	Dishwasher		+		X	1	=	
	Sink with/without garbage grinder(s), domestic and other small type single, double or 2 single with a common trap		+		X	1.5	=	
OTHER	Domestic washing machine		+		X	1.5	=	
	Combination sink and laundry tray single or double (installed on 1 1/2 trap)		+		X	1.5	=	
							Total:	

Insert the TOTAL in section 5 of Schedule 4 (0.Reb.403/97 Table 7.4.9.3).

1. Sump pumps and floor drains are not to be connected to the sewage system. Connection of such fixtures to a sewage system may lead to a hydraulic failure of the said system. The above-mentioned fixtures should be discharged separately to an approved Class 2 (leaching pit) sewage system.

2. Where laundry waste is not more than 20% of the total daily design sanitary sewage flow, it may discharge to a sewage system (Part 8, OBC, 8.1.3.1(2)).

Agent/Owner's signature: _____ Date: _____

SOUTH NATION CONSERVATION
DE LA NATION SUD
1947-2017

SCHEDULE 8 – TYPICAL DRAWING A

ABSORPTION TRENCH METHOD

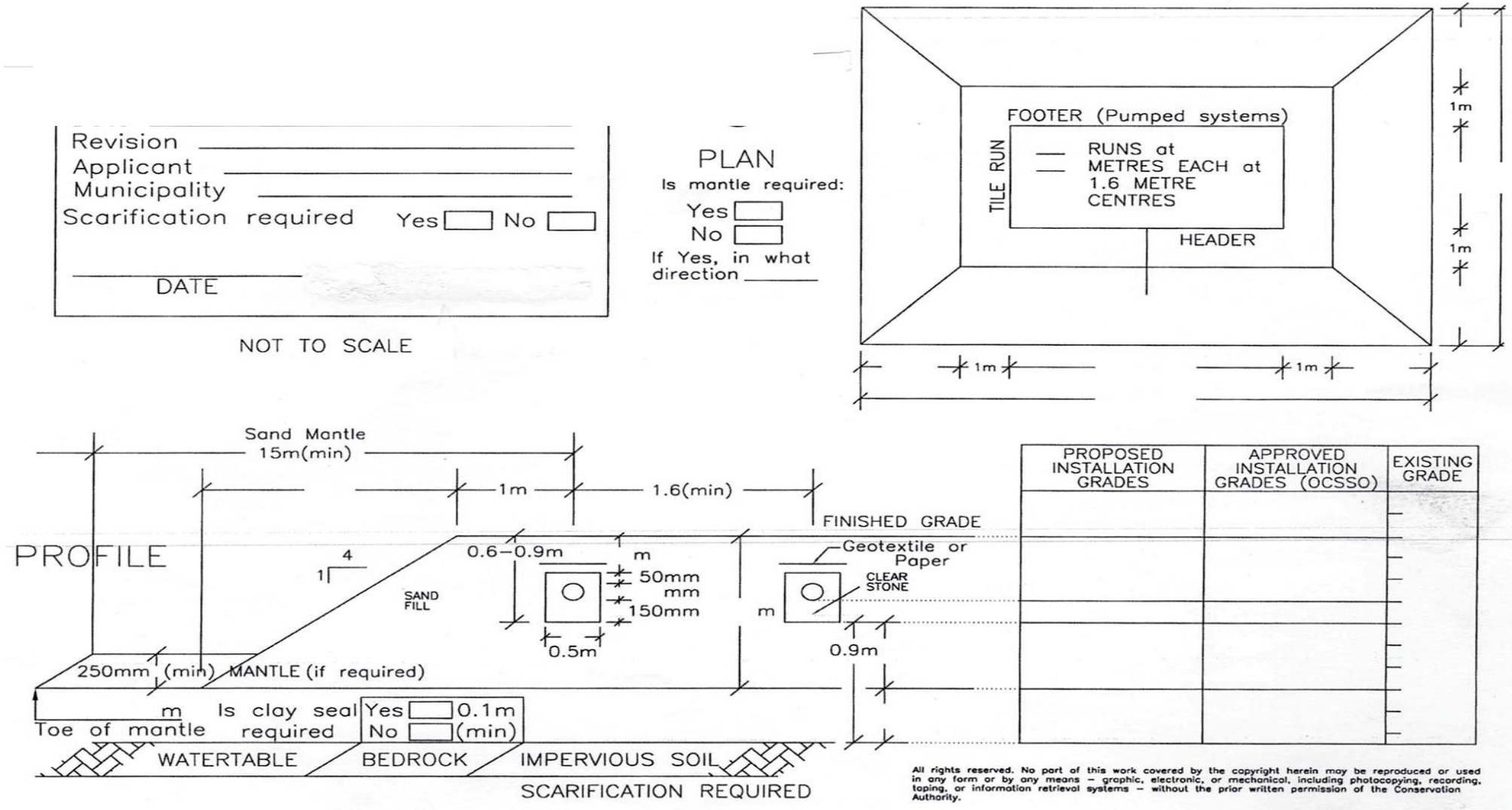

All rights reserved. No part of this work covered by the copyright herein may be reproduced or used in any form or by any means – graphic, electronic, or mechanical, including photocopying, recording, taping, or information retrieval systems – without the prior written permission of the Conservation Authority.

SOUTH NATION CONSERVATION
DE LA NATION SUD
1947-2017

SCHEDULE 9 – TYPICAL DRAWING B

FILTER MEDIA METHOD

Septic Permit # _____
Date _____
Revision _____
Applicant _____
Municipality _____
Scarification required Yes ☐ No ☐

_____
DATE

PLAN

Is mantle required:
Yes ☐
No ☐
If Yes, in what direction _____

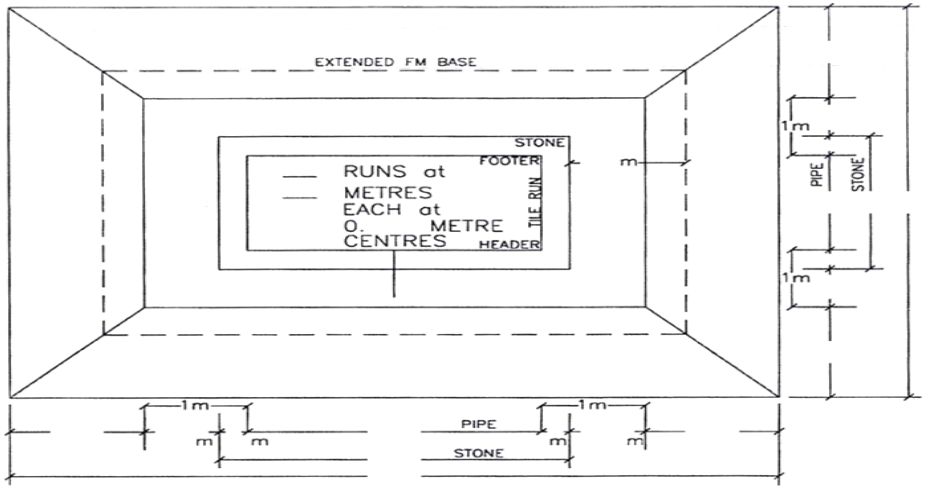

NOT TO SCALE

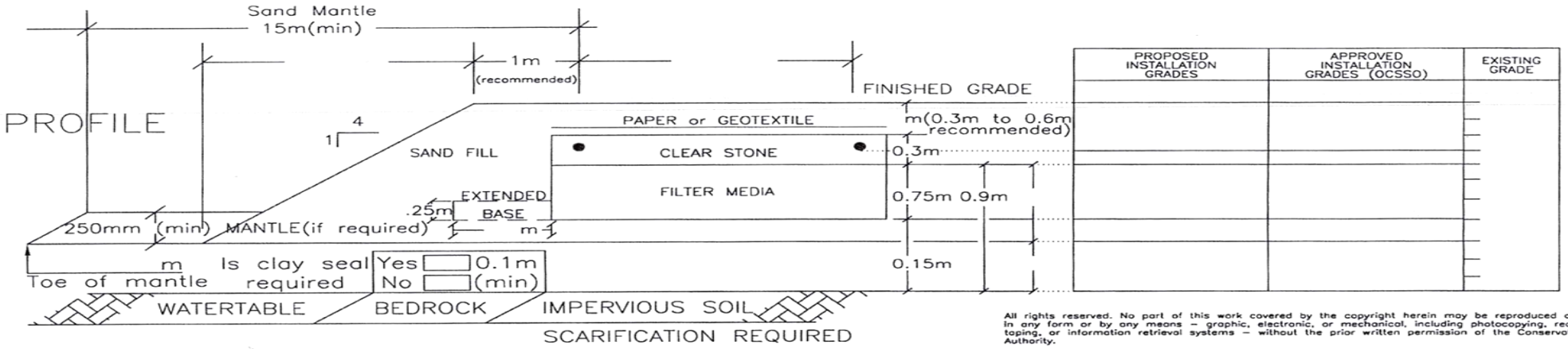

PROPOSED INSTALLATION GRADES	APPROVED INSTALLATION GRADES (OCSSO)	EXISTING GRADE

All rights reserved. No part of this work covered by the copyright herein may be reproduced or used in any form or by any means – graphic, electronic, or mechanical, including photocopying, recording, taping, or information retrieval systems – without the prior written permission of the Conservation Authority.

SOUTH NATION CONSERVATION
DE LA NATION SUD
1947-2017

SCHEDULE 10 – TYPICAL DRAWING C

AREA BED METHOD

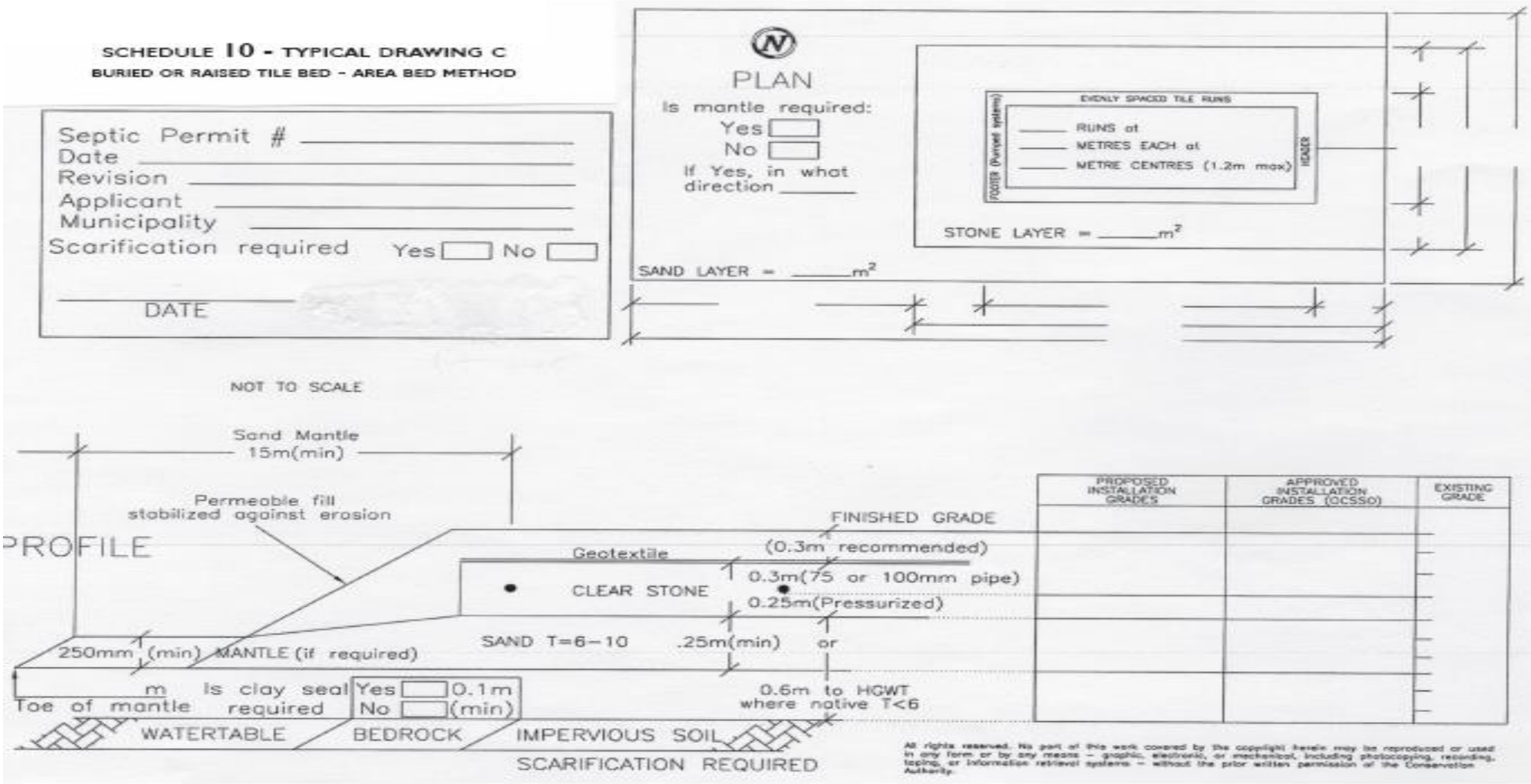

All rights reserved. No part of this work covered by the copyright herein may be reproduced or used in any form or by any means – graphic, electronic, or mechanical, including photocopying, recording, taping, or information retrieval systems – without the prior written permission of the Conservation Authority.

Private Sewage System application Form (Application for a Permit to Construct or Demolish)

SOUTH NATION CONSERVATION
DE LA NATION SUD
1947-2017

SCHEDULE 11 – TYPICAL DRAWING D

BIO-FILTER METHOD

Septic Permit # _____
Date _____
Revision _____
Applicant _____
Municipality _____
Scarification required Yes ☐ No ☐

_____
DATE

NOT TO SCALE

PLAN

Is mantle required:
Yes ☐
No ☐
If Yes, in what direction _____

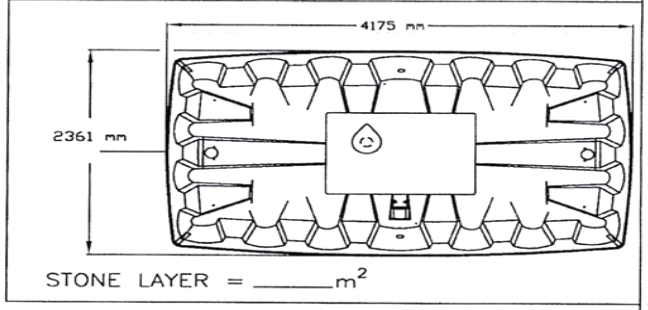

SAND LAYER = _____m²

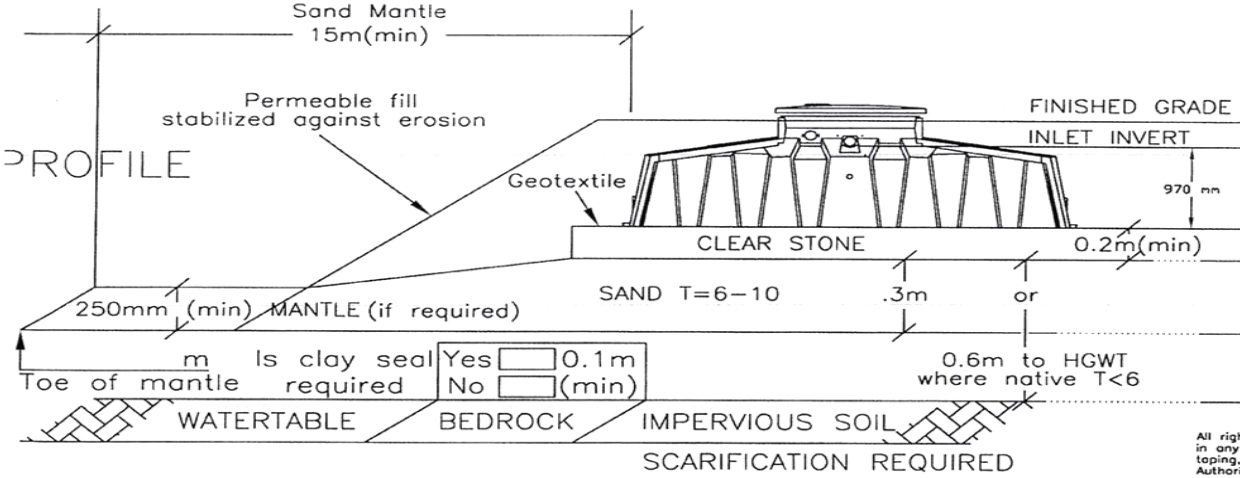

PROPOSED INSTALLATION GRADES	APPROVED INSTALLATION GRADES (OCSSO)	EXISTING GRADE

All rights reserved. No part of this work covered by the copyright herein may be reproduced or used in any form or by any means – graphic, electronic, or mechanical, including photocopying, recording, taping, or information retrieval systems – without the prior written permission of the Conservation Authority.

SOUTH NATION CONSERVATION
DE LA NATION SUD
1947-2017

SCHEDULE 12 - ONTARIO BUILDING CODE MAINTENANCE AND SERVICING REQUIRMENTS

This information sheet is designed to inform the property owner of the Ontario Building Code requirements for maintenance and servicing of the proposed treatment unit indicated on your design that is used in conjunction with the leaching bed constructed as a shallow buried, Type A or Type B dispersal bed.

Building Code states:

8.9.2.3. Class 4 Sewage Systems

(1) Every Class 4 *sewage system* shall be operated in accordance with the literature required by Sentence 8.6.2.2.(6).

(2) No person shall operate a *treatment unit* other than a *septic tank* unless the person has entered into an agreement whereby servicing and maintenance of the *treatment unit* and its related components will be carried out by a person who,

(a) possesses a copy of the literature required by Sentence 8.6.2.2.(6), and

(b) is authorized by the manufacturer to service and maintain that type of *treatment unit*.

(3) The person authorized by the manufacturer to service and maintain the *treatment unit* and who has entered into the agreement referred to in Sentence (2) with the person operating the *treatment unit* shall notify the *chief building official* if,

(a) the agreement is terminated, or

(b) access for service and maintenance of the *treatment unit* is denied by the person operating the *treatment unit*.

8.9.2.4. Sampling of Treatment Units

(1) Every person operating a *treatment unit* that is used in conjunction with a *leaching bed constructed* as a *shallow buried trench*, *Type A dispersal bed* or *Type B dispersal bed* shall,

(a) take a grab sample of the *effluent* to determine the level of $CBOD_5$ and suspended solids in the *effluent*,

(b) carry out the sampling required by Clause (1)(a) in accordance with the methods described in the APHA/AWWA/WEF, "Standard Methods for the Examination of Water and Wastewater", and

(c) promptly submit the results of the sampling required by Clause (a) to the *chief building official*.

(2) Except as provided in Sentence (4), the sampling required by Sentence (1) shall be conducted,

(a) initially, once during the first 12 months after the *sewage system* was put into use, and

(b) thereafter, once during every 12 month period, at least 10 months and not more than 18 months after the previous sampling has been completed.

(3) The concentration of $CBOD_5$ and suspended solids in the grab sample described in Sentences (1) and (4) is deemed to comply with the maximum concentration requirements set out in Table 8.6.2.2. when it does not exceed 20 mg/L for each of these parameters.

(4) If the results of the sampling required by Sentence (1) do not comply with Sentence (3), the person operating the *treatment unit* shall,

(a) resample the *effluent* in accordance with Clauses (1)(a) and (b) within 6 months after the previous sampling has been completed, and

(b) promptly submit the results of the resampling required by Clause (a) to the *chief building official*.

At any time the above requirements are not adhere, the sewage system located on your property will not be in conformity with the building code.

_____ _____

Signature of property owner Date